Dylan Thornburg

Santa Clara University	ELEN 164 Winter 2026	Dr. Shoba Krishnan
Laboratory #5: Linear Regulators		

Objectives

- To study linear regulators and analyze their performance.

Laboratory Procedure:

Part 1: LTSpice Simulations

Section 1: Functional check (NPN)

Create a new LTspice schematic for the linear regulator shown in Figure 1. **Label the input and output nodes as Vs and Vo, respectively**. Set the reference voltage to 1.2V and source voltage to 6V. Set the load to 100 Ohms.

Note: You need to pick components from the library.

Use the NPN transistor - 2SCR542P. Look up its data sheet and record its current limit.

Ic=5A=current limit

For the operational amplifier use the model for the LT1213.

Use the R1 and R2 from the prelab to produce an output voltage of 3.3V. (values of R1 and R2 need to be in the order of 100s of Kohms).

The capacitor is value 470uF with 10mΩ resistance called ESR.

Enter the *.op* commands **.OPTIONS plotwinsize=0** and **.OPTIONS numdgt=7** to give your simulation more resolution.

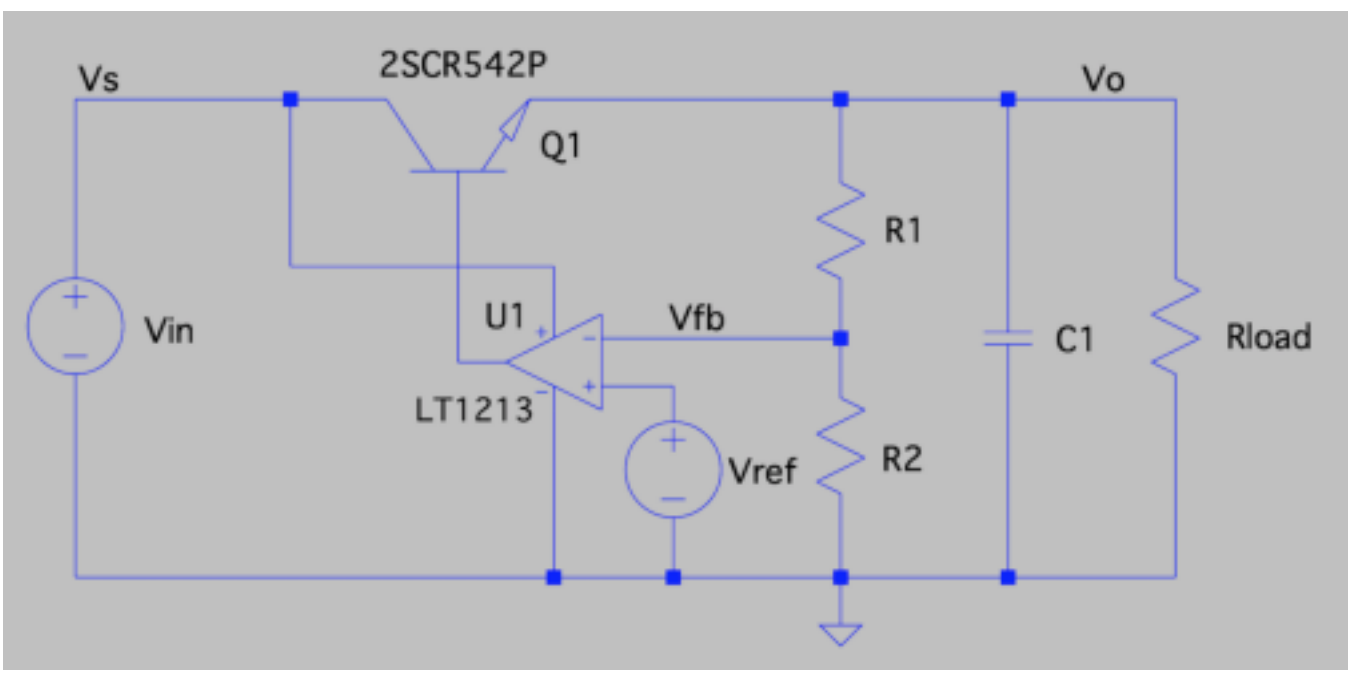

Figure 1. Linear Regulator Functional Check (NPN)

Assignment:

❖ Run a transient response and look at the voltage output and input waveforms.

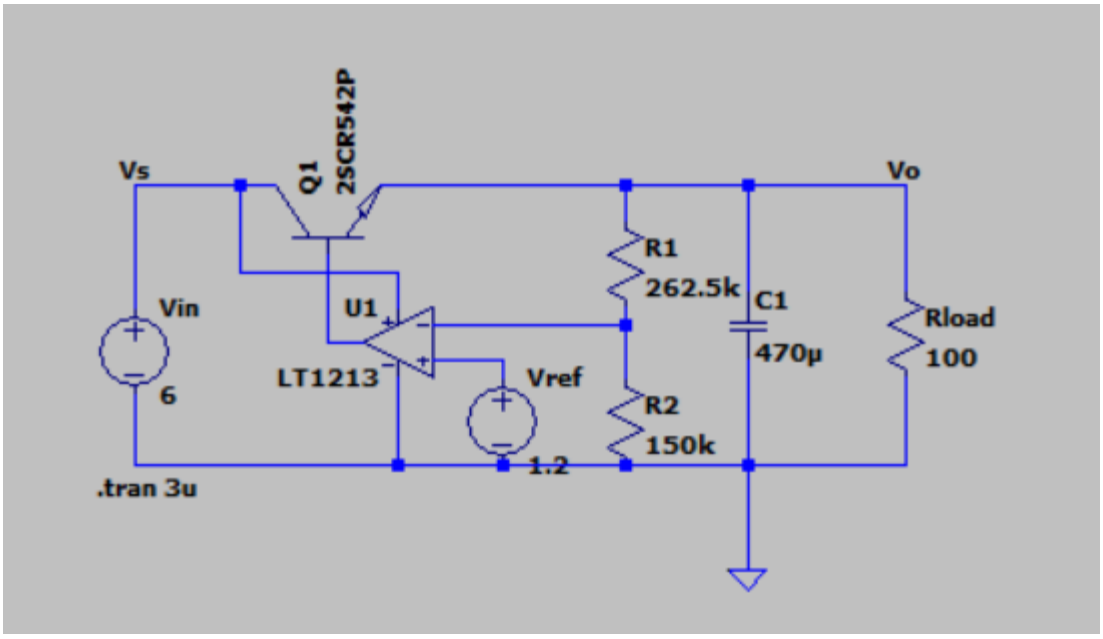

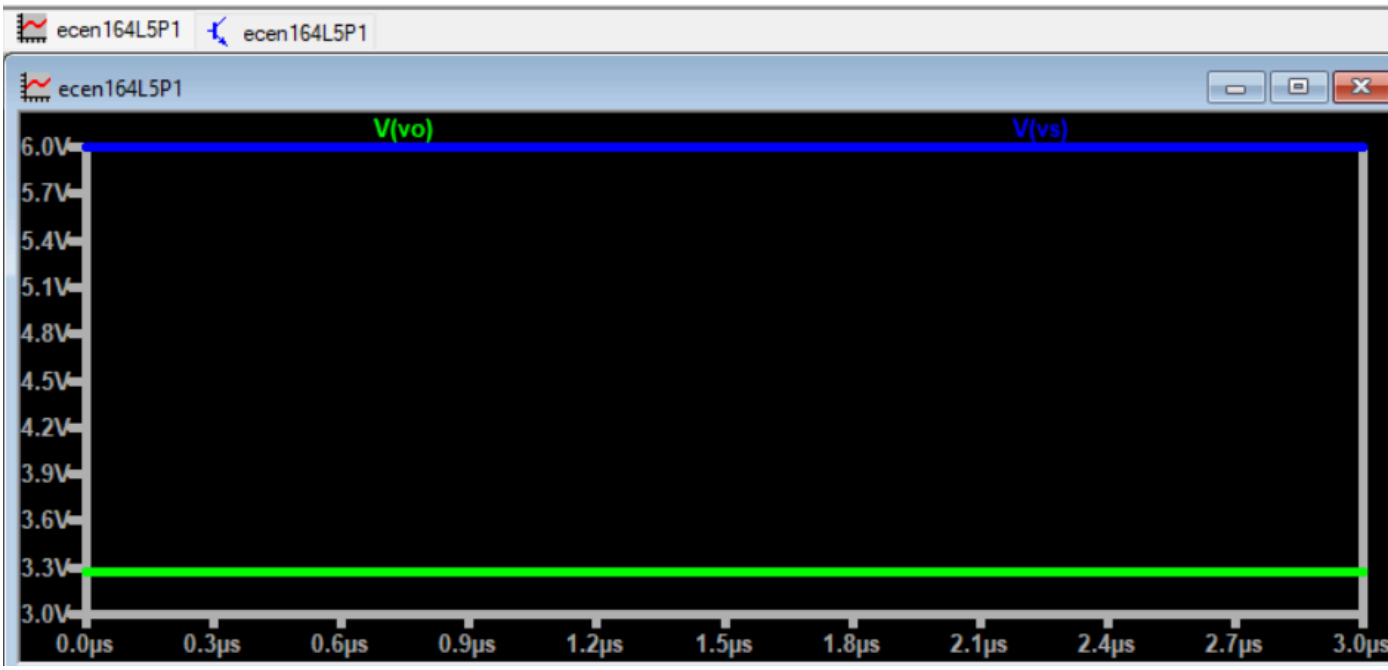

❖ Is the output what you expected?

Yep, it's 3.3V.

❖ Record V_{BE}, V_{CE} and Base and output current. What do you note about these measurements?

Vbe= 1.2V, Vce = 2.7V, Io = ~32.766342mA, Ib = ~99.717099uA

Section 2. Drop-Out Voltage

Using the same schematic from section 1, make modifications as specified below.

1. Ensure the source voltage is a DC voltage at 6V.
2. Step the input voltage from 6V down in steps of 0.5V
3. Run a DC operating point simulation and observe the V_{BE}, V_{CE} and output voltage.
4. Plot input voltage and output voltage.

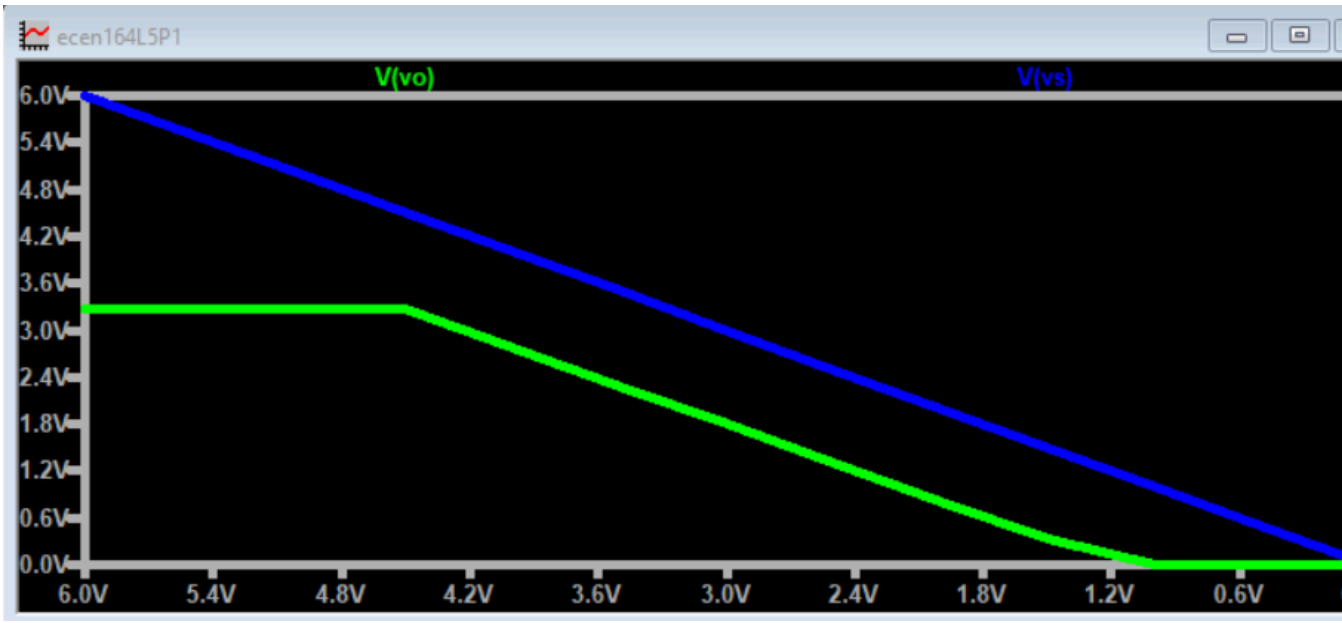

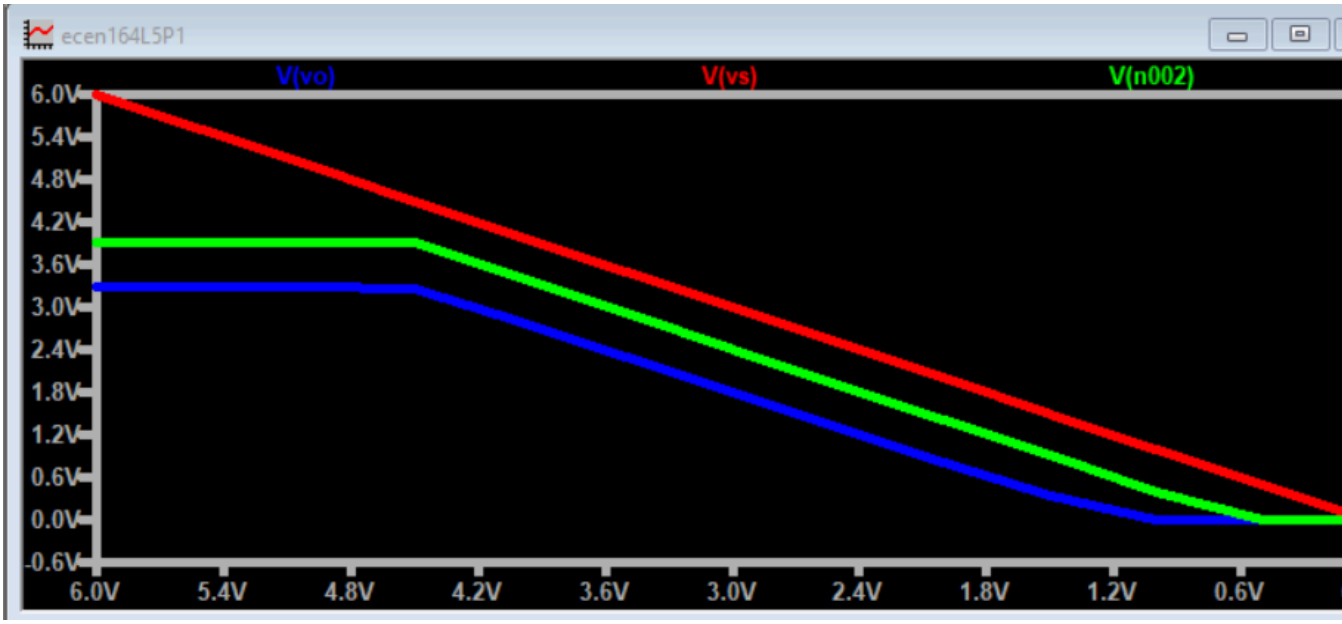

Assignment

- ❖ What do you notice about the output voltage? At what point can the output voltage no longer be sustained?

  Vout remains at 3.3V until our Vin drops to 4.5V. This is due to the Vin and Vout gap being less than Vref (1.2). The regulator tries to stop this so Vout drops to try and keep that delta.

Section 3: Functional check (PNP)

Create a new LTspice schematic for the linear regulator shown in Figure 2. **Label the input and output nodes as Vs and Vo, respectively**. Set the reference voltage to 1V and source voltage to 6V. Set the load to 100 Ohms.

Note: You need to pick components from the library.

Use the PNP transistor - 2SAR542P. Look up its data sheet and record its current limit.

For the operational amplifier use the model for the LT1213

Enter the *.op* commands **.OPTIONS plotwinsize=0** and **.OPTIONS numdgt=7** to give your simulation more resolution.

Use the R1 and R2 from the prelab to produce an output voltage of 3.3V.

The capacitor is value 470uF with 10mΩ resistance called ESR.

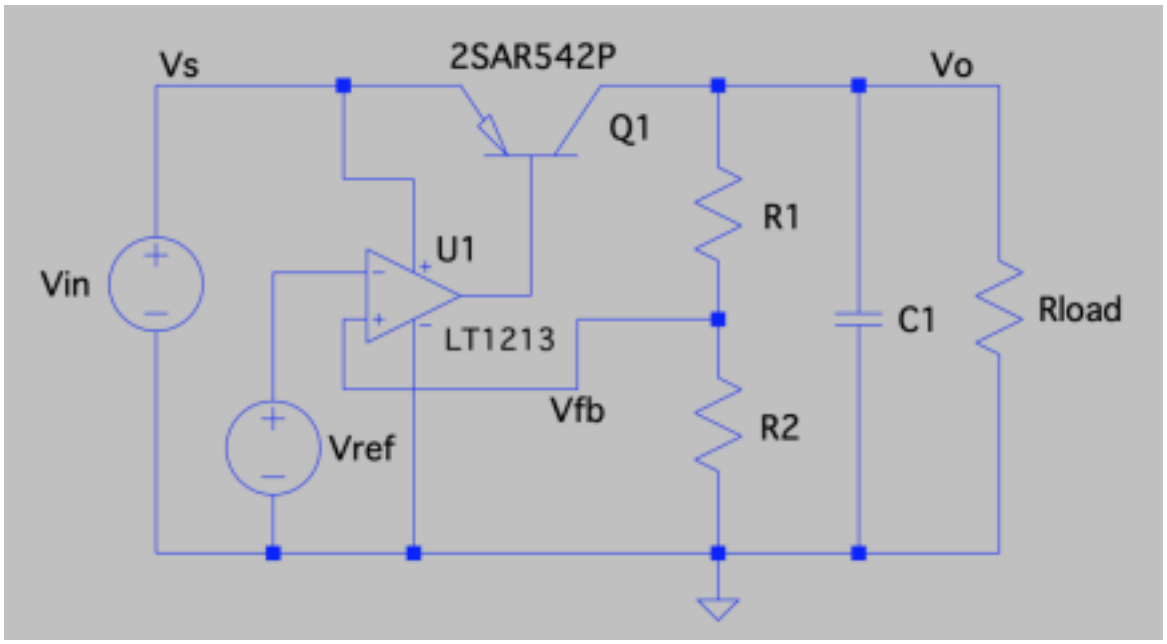

Figure 2. Linear Regulator Functional Check (PNP)

Assignment:

- ❖ Run a Transient response and look at the voltage output and input waveforms.

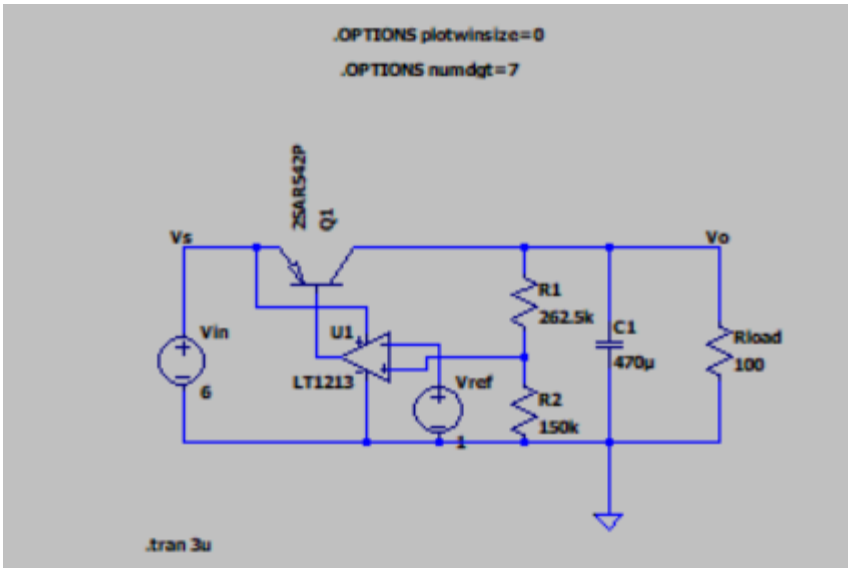

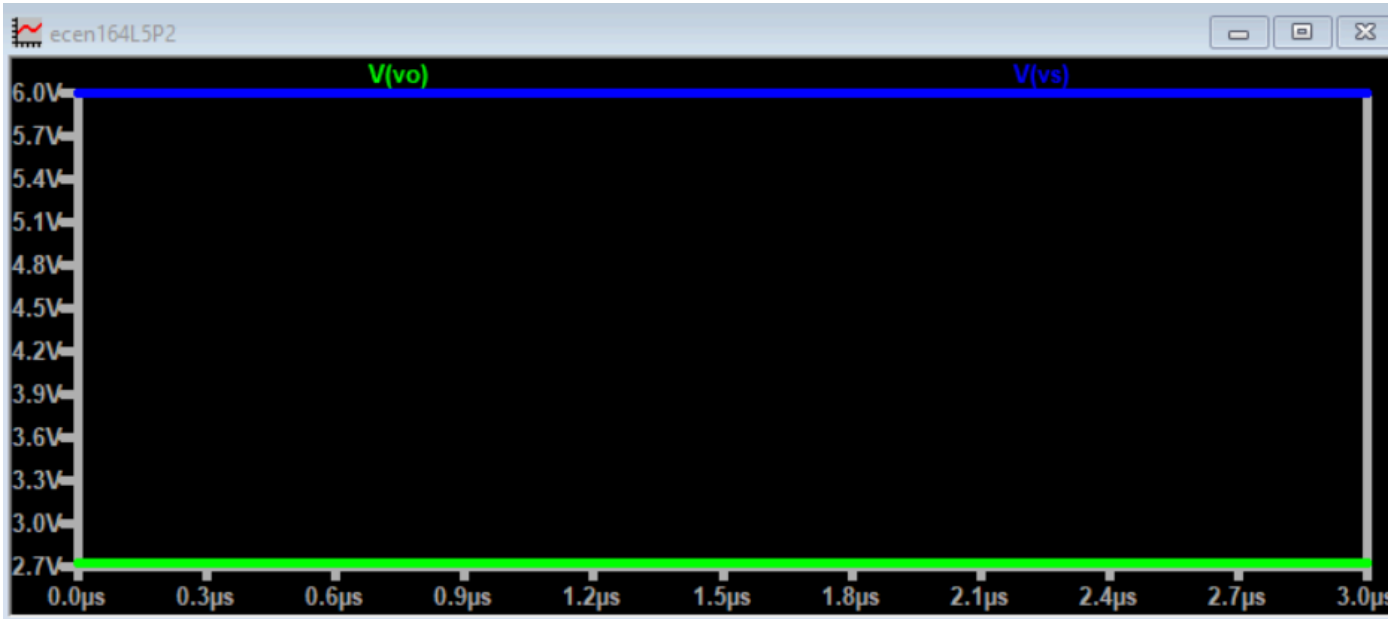

❖ Is the output what you expected?

It's close. We now expect 2.75V based on vref at 1V, but it seems to be a little low.

❖ Record V_{EB}, V_{EC} and base current. What do you note about these three measurements?

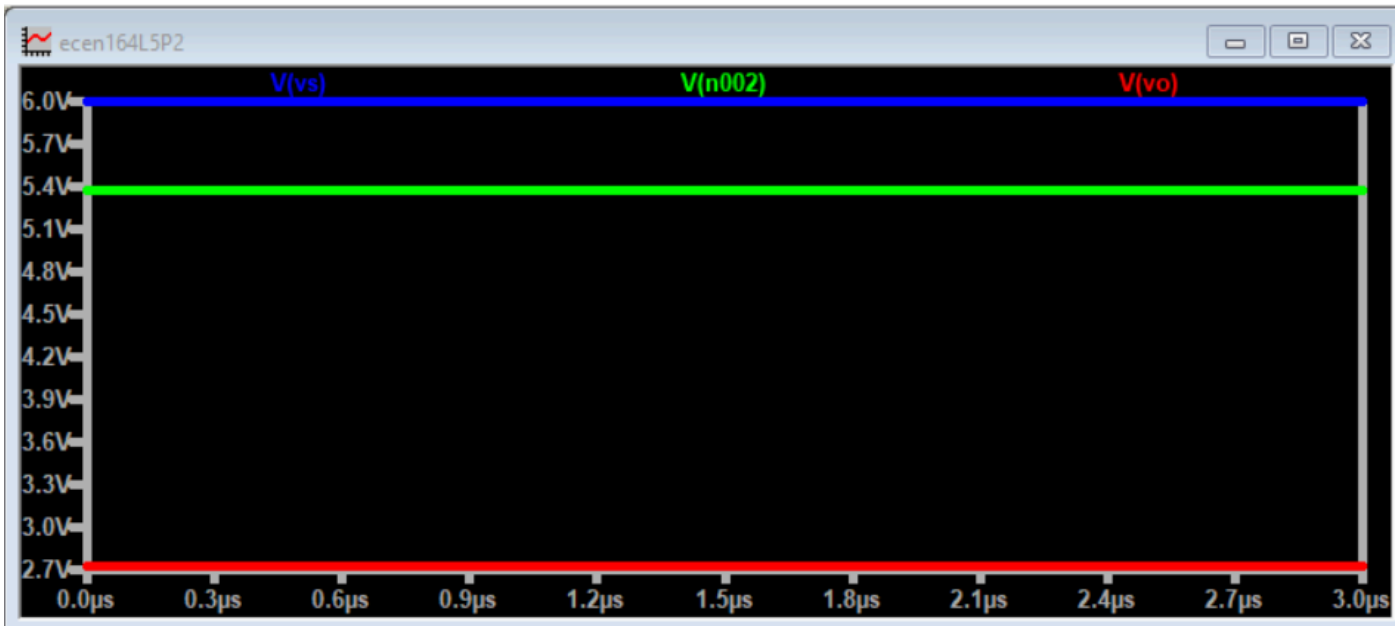

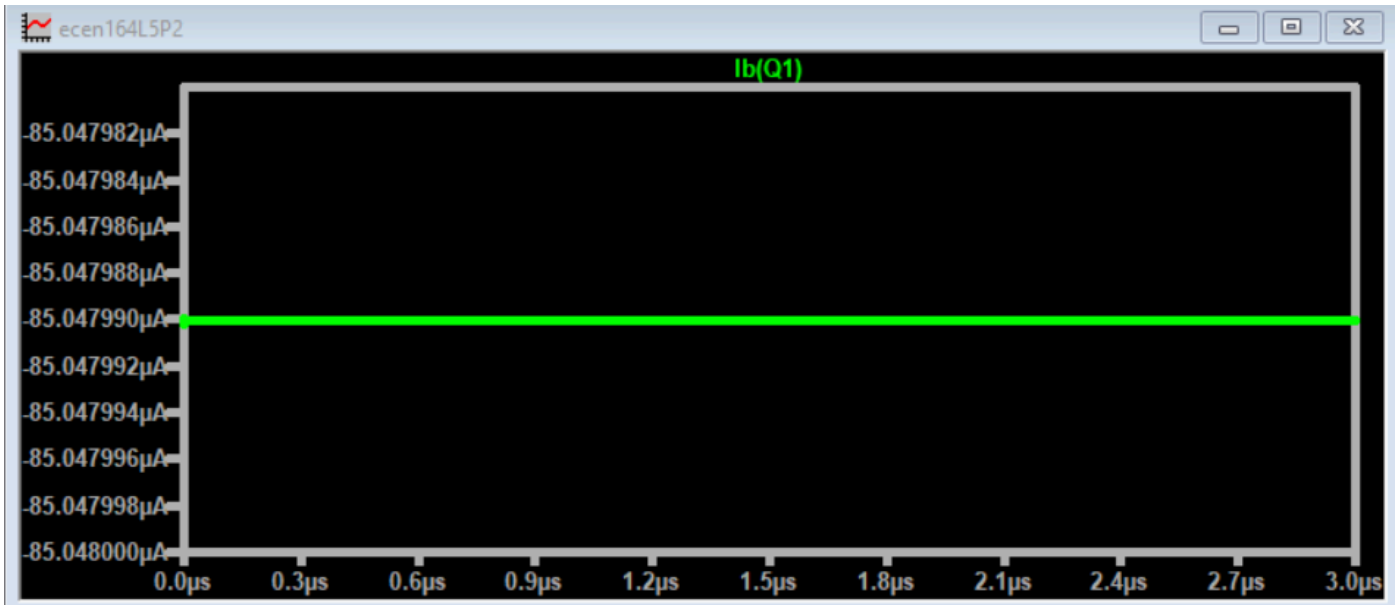

Veb is around .6V, Vec is around 3.3V, and Ib = 85.047990uA

Section 4. Drop-Out Voltage

Using the same schematic from section 3, make modifications as specified below.

5. Ensure the source voltage is a DC voltage at 6V.
6. Step the input voltage from 6V down in steps of 0.5V
7. Run a DC operating point simulation and observe the V_{BE}, V_{CE} and output voltage.
8. Plot input voltage and output voltage.

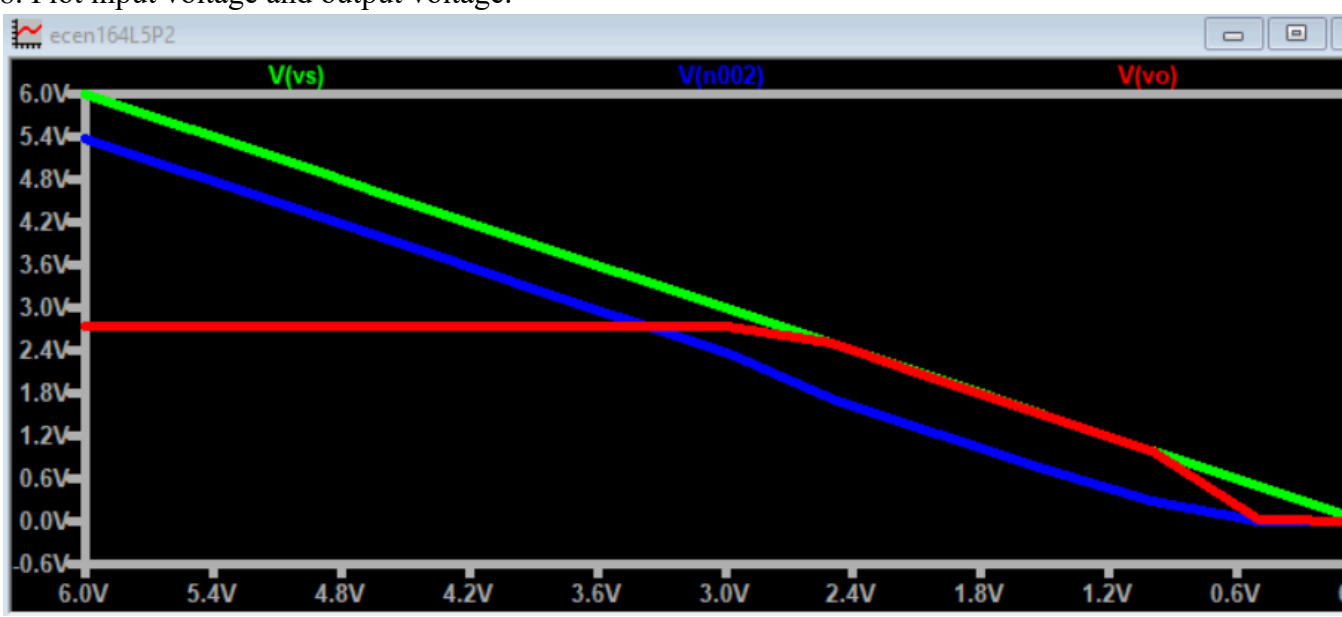

Assignment

❖ What do you notice about the output voltage?

The output voltage no longer tries to keep that Vref delta. It remains at it's point until Vin is really close to 2.7

❖ At what point can the output voltage no longer be sustained?

About 3V

Section 5: Load Regulation

Using the same schematic from section 3, make modifications as specified below. 1. Change the Load resistance to a variable one as shown in Figure 3. Change the value of the variable I by using the .param statement (.step param I 0.1 10 0.1)

This sweeps the load resistance value as Vo is fixed at 3.3V. So sweeping the current from 0.1A to 10A implies decreasing the load resistance given R = 3.3/I.

2. Run a DC operating point simulation.

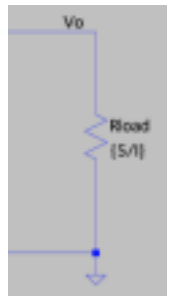

Figure 2. Variable Resistance

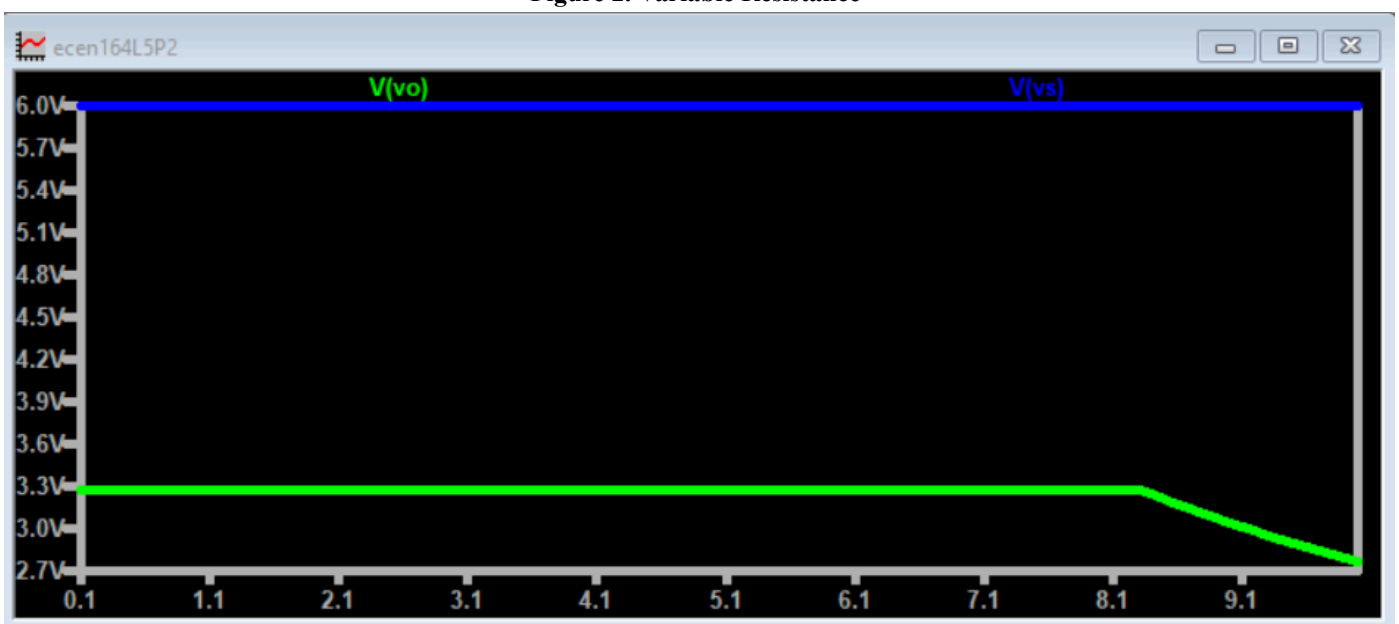

Assignment

❖ How does the output voltage change for the different load requirements?

It provides the load until current exceeds ~8.3A. We solved for the max current of the NPN, but here it seems that the PNP max current is around this 8.3 number.

Section 5: Line Regulation

Using the same schematic from Section 3, make modifications as specified below. Change source voltage to Sine Wave: (DC OFFSET = 6V, Amplitude = 0.5V, Freq = 60Hz) Run a transient response.

Assignment

❖ What does the output waveform look like?

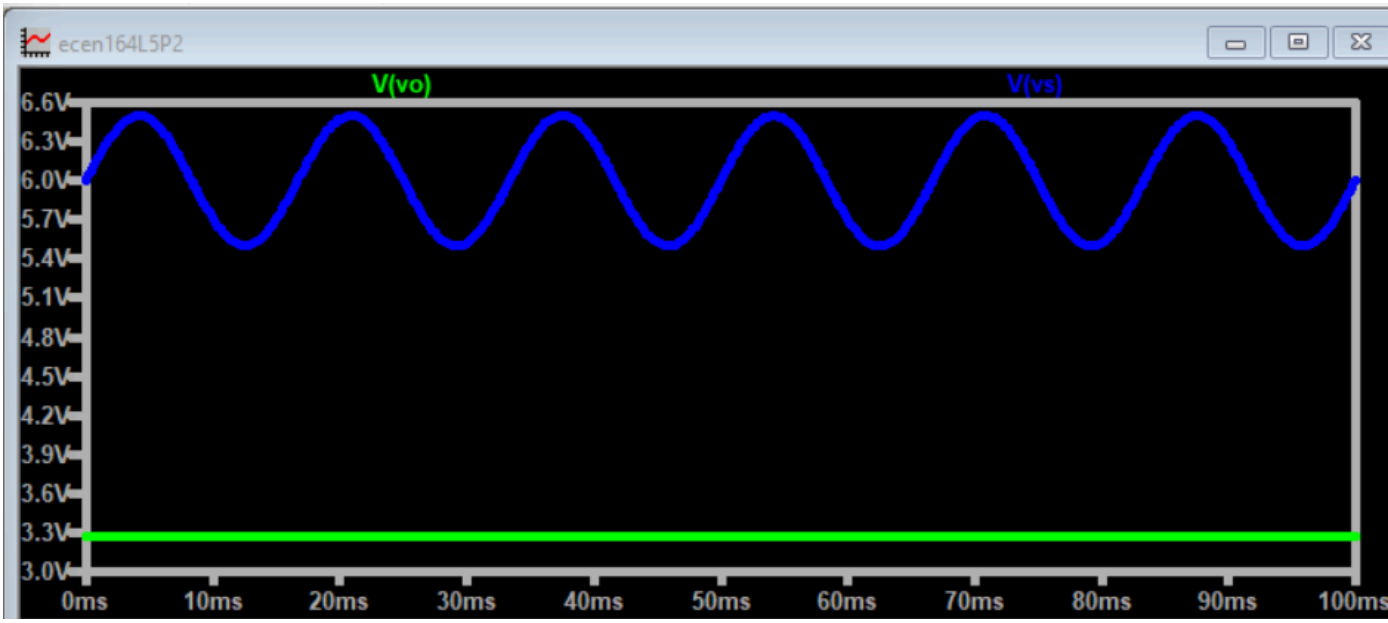

Great DC actually.

❖ What might we add to help prevent the output ripple voltage.

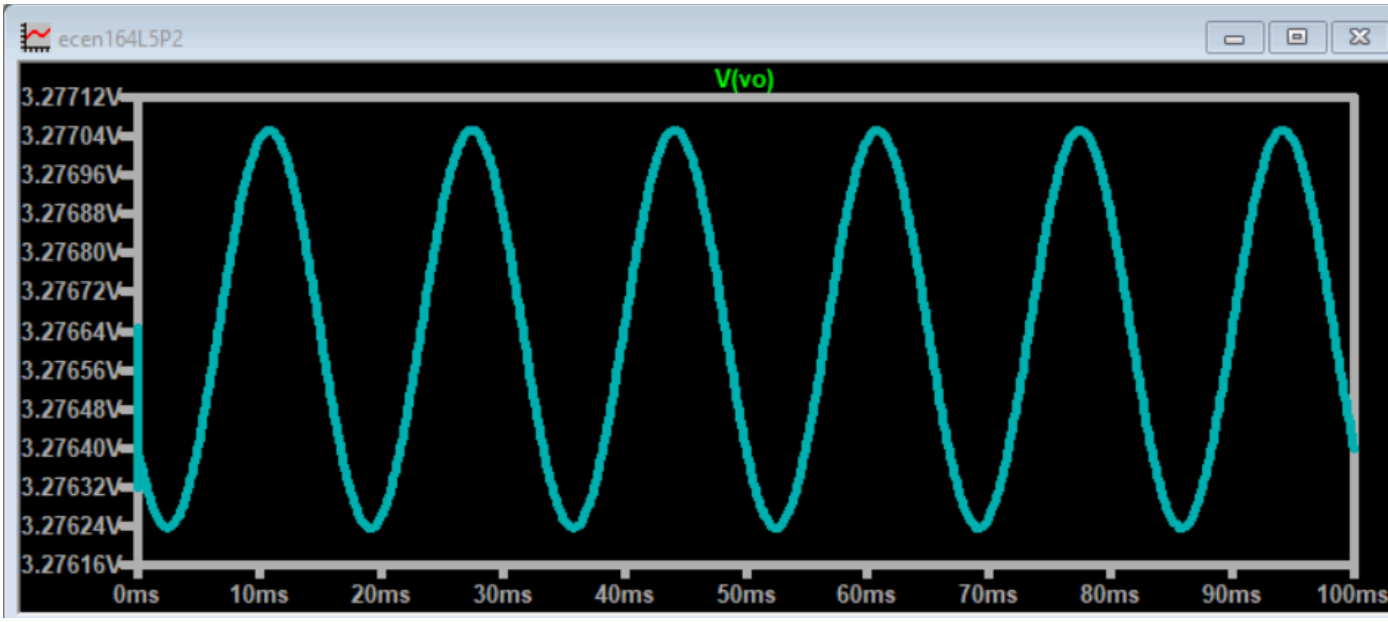

Well zooming in, we can see the ripple, but its still quite small. I guess we could put a bigger capacitor on the end.